32544 ALIN CORD DALI 1F-B

Accessory for linear light fittings

5905339325440

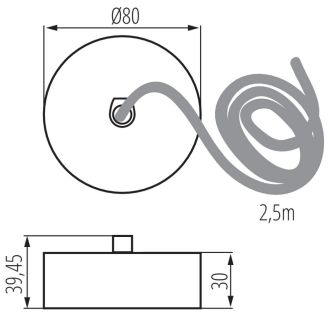

GENERAL DATA:

Colour: black
Place of assembly: for suspension on the ceiling
Compatible with a dimmer: DALI
Height [mm]: 39.45
Diameter [mm]: 80
Cable length [m]: 2.5

TECHNICAL DATA:

Connection type: Self-clamping block
Wire diameter [mm²]: 5 x 0,75

LOGISTIC DATA:

Packaging method: 1
Number of units in the secondary packaging: 1
Number of units in the packaging: 1
Net unit weight [g]: 300
Grammage [g]: 306
Length of a unit pack [cm]: 12
Width of a unit pack [cm]: 12
Height of a unit pack [cm]: 5
Weight of a cardboard box [kg]: 0.306
Width of a cardboard box [cm]: 12
Height of a cardboard box [cm]: 5
Length of a cardboard box [cm] : 12
Volume of a cardboard box [m³]: 0.00072

We reserve the right to make technical changes. The data contained in this material are not legally binding.
Photometry: the results obtained from testing were from a specific sample.

EN