

EAN: 5905339263285

LED kit
KANLUX **26328 COB SET 3m DIM WW**



PRODUCT PARAMETERS

Rated voltage [V]	**220-240 AC**
Rated frequency [Hz]	**50**
Rated power [W]	**3m=18**

Date of issue: 25.11.2026, 13:35

We reserve the right to make technical changes. The data contained in this material are not legally binding.

Photometry: the results obtained from testing were from a specific sample.

Kanlux S.A. ul. Objazdowa 1-3, 41-922 Radzionków, Poland kanlux@kanlux.com

EN

PRODUCT PARAMETERS

Luminous flux [lm]	**3m=1620**
Correlated colour temperature [K]	**3000**
Colour consistency in McAdam ellipses	**≤5**
Colour temperature	**warm white**
Diode type	**LED COB**
Colour rendering index	**90**
Rated lamp-service life [h]	**30000**
Number of on/off cycles	**≥30000**
Place of application	**Indoors**
IP class	**00**
Built-in brightness control	**yes**
Input voltage - PRI [V]	**220-240 AC**
Output voltage - SEC [V]	**12 DC**
Possibility of cutting LED strips into segments [cm]	**2,5**
Product category according to 2019/2020/EU	**Light source (LS)**
Mercury content	**no**
Mercury content in the lamp [mg]	**0**

DIMENSIONS AND MOUNTING

Length [mm]	**3000**
Connection type	**Cable terminated with a plug**

MATERIAL AND CONSTRUCTION

Class of protection against electric shock	**II/III**
Minimum distance from the illuminated object	**0,1m**

LIGHT SOURCE PARAMETERS

On-mode power of the light source Pon [W]	**0,5m = 4**
Energy consumption in on-mode of the light source (kWh/1000h)	**4**
Energy efficiency class	**G**
Useful luminous flux of the light source Φuse [lm]	**0,5m = 368**
Useful luminous flux of the light source Φuse [lm]	**in sphere (360°)**
Standby power (Psb)	**0,5W**
Height of the light source [mm]	**500**
Width of the light source [mm]	**8**
Depth of the light source [mm]	**2**
Chromaticity coordinates (x)	**0,44**

LIGHT SOURCE PARAMETERS

Chromaticity coordinates (y)	**0,403**
Claim of equivalent power [W]	**0,5m = 33**
R9 colour rendering index value	**40**
Survival factor	**0,9**
The lumen maintenance factor	**0,96**
Colour-tuneable light source	**no**
High luminance light source	**no**
Anti-glare shield	**no**
Dimmable	**only with specific dimmers**

PHOTOMETRIC DATA

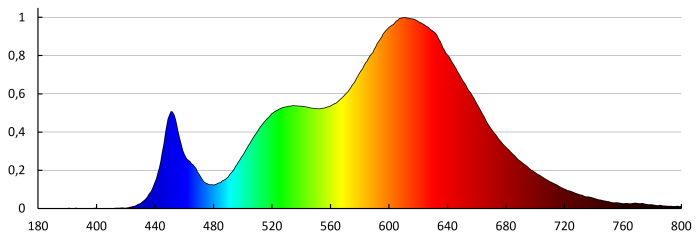

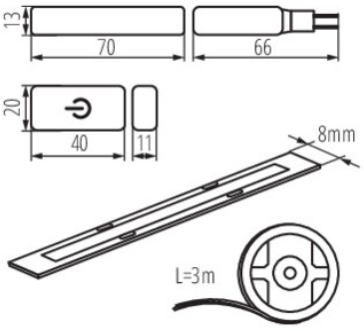

Date of issue: 25.11.2026, 13:35

We reserve the right to make technical changes. The data contained in this material are not legally binding.

Photometry: the results obtained from testing were from a specific sample.

Kanlux S.A. ul. Objazdowa 1-3, 41-922 Radzionków, Poland kanlux@kanlux.com

EN

LOGISTICS	
Unit of measurement	**package**
Packaging method	**10**
Number of units in the secondary packaging	**1**
Number of units in the packaging	**10**
Net unit weight [g]	**162**
Grammage [g]	**260**
Gross unit weight [g]	**222**
Length of a unit pack [cm]	**18.5**
Width of a unit pack [cm]	**7**
Height of a unit pack [cm]	**22**
Weight of a cardboard box [kg]	**2.6**
Width of a cardboard box [cm]	**35**
Height of a cardboard box [cm]	**21**
Length of a cardboard box [cm]	**35**
Volume of a cardboard box [m³]	**0.025725**

ADDITIONAL INFORMATION

3 years Warranty under the terms of the warranty statement, available on our website

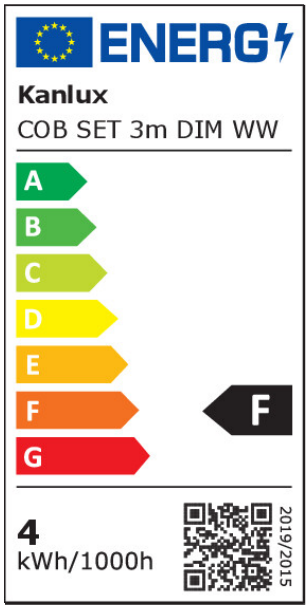

Date of issue: 25.11.2026, 13:35
We reserve the right to make technical changes. The data contained in this material are not legally binding.
Photometry: the results obtained from testing were from a specific sample.
Kanlux S.A. ul. Objazdowa 1-3, 41-922 Radzionków, Poland kanlux@kanlux.com

EN