# 36292 KMCCB-F-250A

MCCB molded case circuit breaker
5905339362926

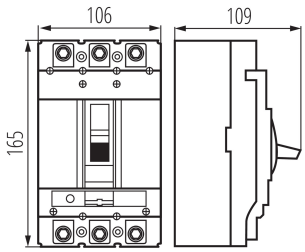


## PRODUCT PARAMETERS:

**Rated voltage [V]**: 230/400 AC
**Rated frequency [Hz]**: 50
**Rated current [A]**: 250
**Utilisation category**: A
**Place of assembly**: mounting plate
**IP class**: 20
**Znamionowa graniczna zwarciowa zdolność łączeniowa Icu** : 36kA (380/415V AC); 50kA (220/230V AC)
**Prąd znamionowy wyłączalny zwarciowy roboczy Ics** : 27kA (380/415V AC); 36kA (220/230V AC)
**Length [mm]**: 106
**Width [mm]**: 109
**Height [mm]**: 165
**Connection type**: Terminal block
**Control type**: mechaniczne
**Rated breaking voltage Ue [V]**: 380/415; 220/230
**Rated insulation voltage UI [V]**: 800
**Rated impulse withstand voltage Uimp [V]**: 8000
**Number of poles**: 3

## LOGISTIC DATA:

**Unit of measurement**: unit
**Packaging method**: 12
**Number of units in the secondary packaging** : 1
**Number of units in the packaging** : 12
**Net unit weight [g]** : 1696
**Grammage [g]** : 1808.33
**Gross unit weight [g]** : 1758
**Length of a unit pack [cm]** : 17
**Width of a unit pack [cm]** : 11.5
**Height of a unit pack [cm]** : 11
**Weight of a cardboard box [kg]** : 21.69996
**Width of a cardboard box [cm]** : 37.5
**Height of a cardboard box [cm]** : 24.5
**Length of a cardboard box [cm]** : 37
**Volume of a cardboard box [m³]** : 0.033994

Date of issue: 11.12.2025, 09:01
We reserve the right to make technical changes. The data contained in this material are not legally binding.
Photometry: the results obtained from testing were from a specific sample.
Kanlux S.A. ul. Objazdowa 1-3, 41-922 Radzionków, Poland kanlux@kanlux.com

EN

# 36292 KMCCB-F-250A

## MCCB molded case circuit breaker

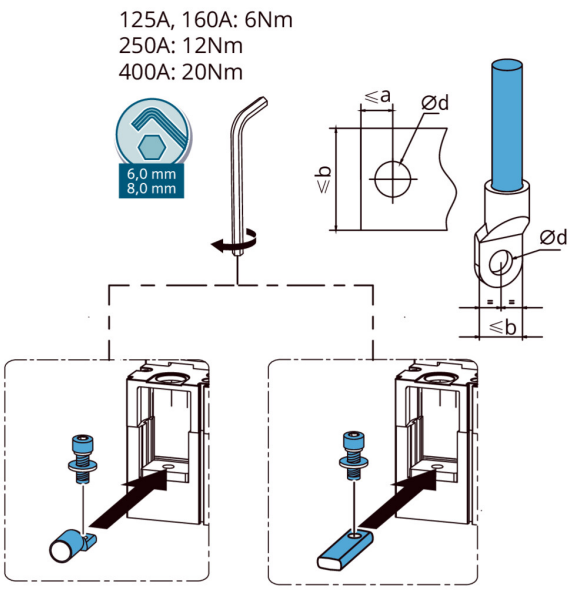


Unit:mm

| No. | Frame size | Terminal block Width b | Terminal block Inner hole d | Terminal block Hole margin a |
|---|---|---|---|---|
| 1 | 125 | 16 | Ø 9 | 7 |
| 2 | 160 | 17 | Ø 9 | 7 |
| 3 | 250 | 22 | Ø 9 | 9 |
| 4 | 400 | 30 | Ø 11 | 12.4 |

3P:
125A: 6x M8x16mm
160A, 250A: 6x M8x20mm
400A: 6x M10x30mm

4P:
125A: 8x M8x16mm
160A, 250A: 8x M8x20mm
400A: 8x M10x30mm

## ACCESSORIES

**36294** KMCCB-F-125A/AL/L styk alarmowy

**36293** KMCCB-F-125A/AX/L styk pomocniczy

**36303** KMCCB-F-125A/RL/R wyzwalacz wzrostowy

**36296** KMCCB-F-125A/UV wyzwalacz podnapięciowy

**36298** KMCCB-F-250A/AL/L styk alarmowy



**36297** KMCCB-F-250A/AX/L styk pomocniczy

Date of issue: 11.12.2025, 09:01

We reserve the right to make technical changes. The data contained in this material are not legally binding.
Photometry: the results obtained from testing were from a specific sample.

Kanlux S.A. ul. Objazdowa 1-3, 41-922 Radzionków, Poland kanlux@kanlux.com

EN

# 36292 KMCCB-F-250A

MCCB molded case circuit breaker

| | | |
|---|---|---|
| **36306** | KMCCB-F-250A/RL/R | wyzwalacz wzrostowy |

| | | |
|---|---|---|
| **36300** | KMCCB-F-250A/UV | wyzwalacz podnapięciowy |

We reserve the right to make technical changes. The data contained in this material are not legally binding.
Photometry: the results obtained from testing were from a specific sample.
Kanlux S.A. ul. Objazdowa 1-3, 41-922 Radzionków, Poland kanlux@kanlux.com

EN